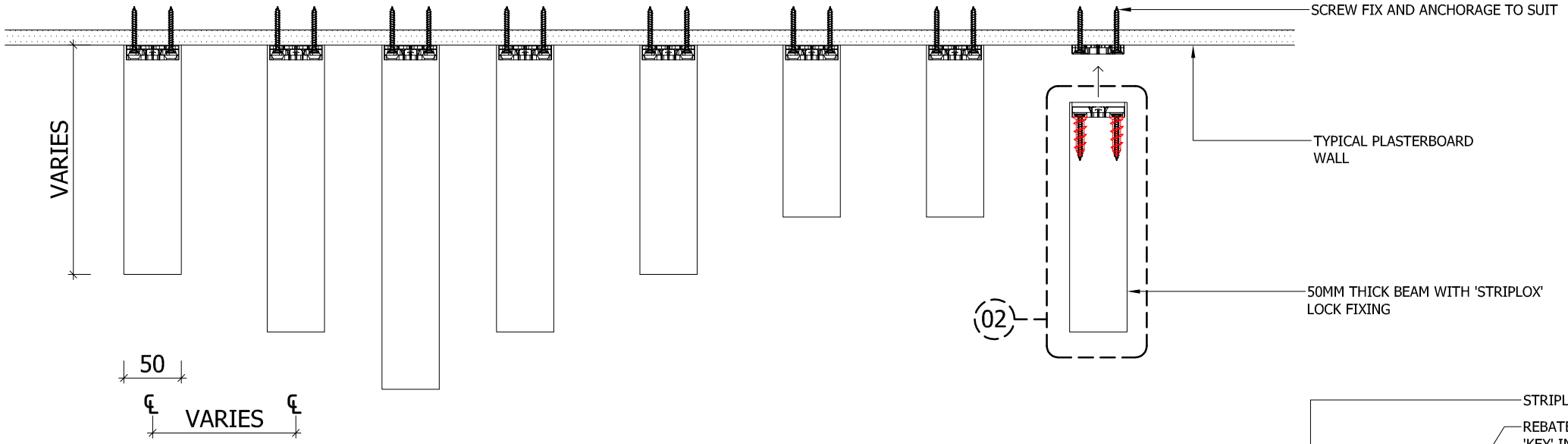

01 PLAN - BEAMS
Scale: 1:5

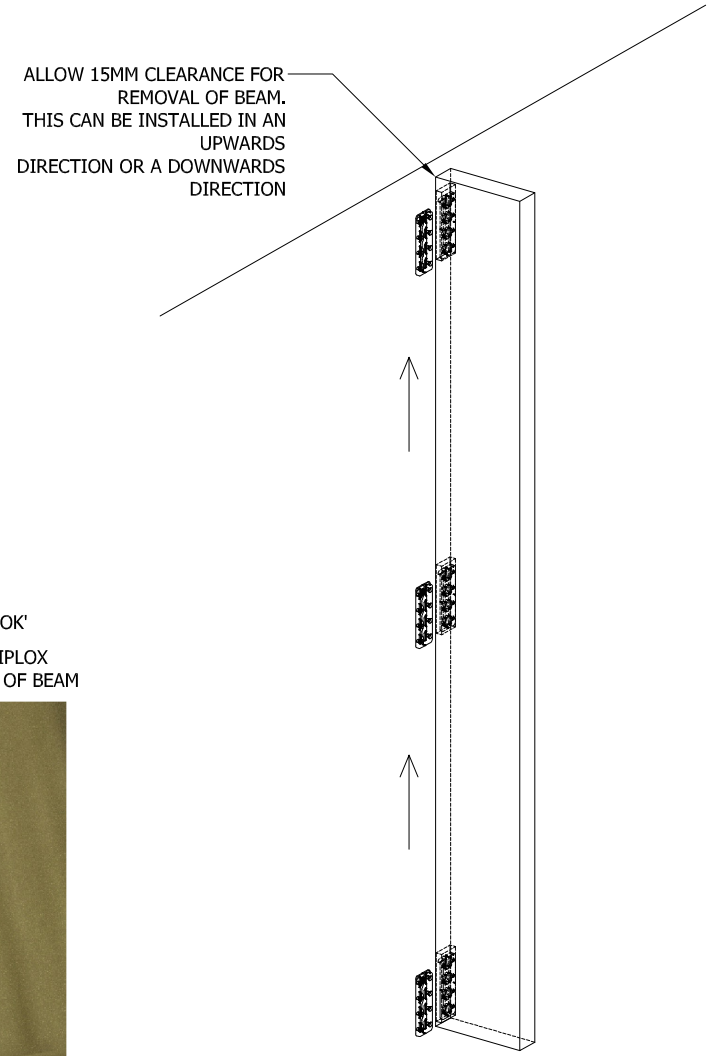

TYPICAL SIZES	
LENGTH	WIDTH
2950	200
2390	200

*SIZES AND THICKNESSES ARE SHOWN AS TYPICAL ONLY - CUSTOM SIZES AND THICKNESSES CAN BE ACCOMADATED ON REQUEST

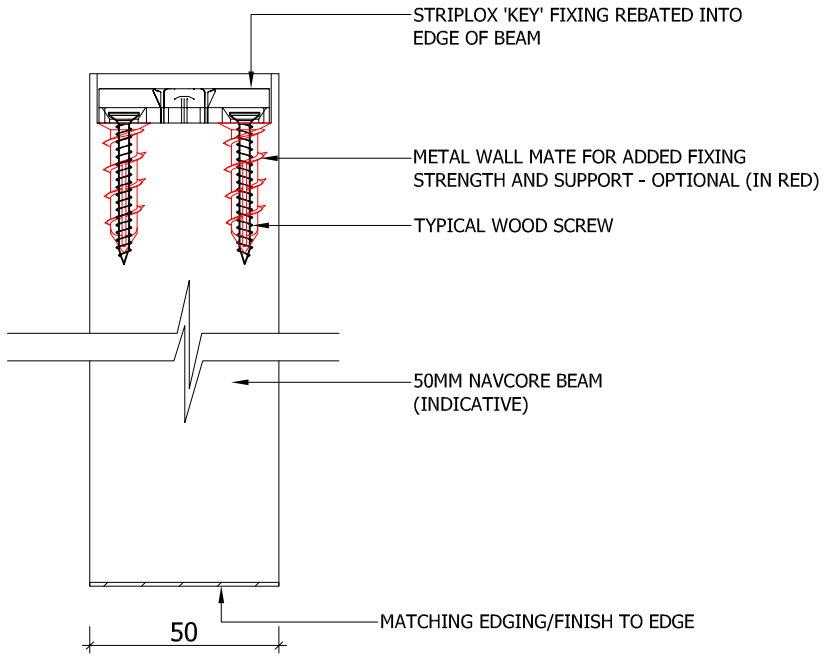

02 SECTION - TYPICAL BEAM
Scale: 1:2

04 3D - WALL & BEAM FIXING
Scale: NTS

03 3D - CONCEPT DESIGN WALL FIXING
Scale: NTS

05 3D - STRIPLOX HOOK & KEY FIXINGS
Scale: NTS

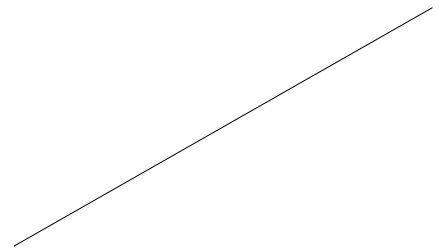

06 ISOMETRIC - BEAM FIXING DETAIL
Scale: NTS

KEYSTONE acoustics
architecturally designed solutions
7-8 Davis Road, Wetherill Park NSW 2164
P: (02) 9604 8813 F: (02) 9609 5348
www.keystoneacoustics.com.au